Snowdragon Industrial Co.,Ltd

DATA SHEET

ϕ 5.0*8.7mm Round with Flange Colored LED Lamp

Package Dimensions (mm)

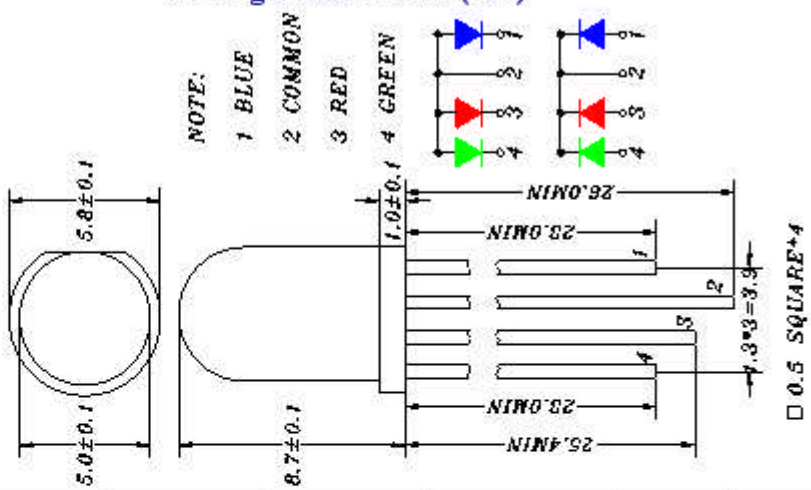

Part Number	Chip Material	Lens Type	Emitting Color	Forward Voltage (V)		Dominant Wavelength (nm)		Luminous Intensity (mcd)		Reverse Current 反向电流 (μA)	Viewing Angel (deg)
				TYP	MAX	MIN	MAX	MIN	MAX	MAX	Δθ
SDL500RGBCC-01	GaALAs	Water Clerar	Ultea Bright Red	1.80	2.40	620	640	800	1000	7	±12.5
	InGaN		U-B Pure Green	3.00	3.60	510	530	4000	5000	7	
	InGaN		Ultea Bright Blue	3.00	3.60	460	475	1000	1500	7	
SDL500RGBDK-01	GaALAs	White diffused	Ultea Bright Red	1.80	2.40	620	640	400	600	7	±45
	InGaN		U-B Pure Green	3.00	3.60	510	530	1000	1500	7	
	InGaN		Ultea Bright Blue	3.00	3.60	460	475	500	700	7	
Test condition				IF=20mA		IF=20mA		IF=20mA		VR=5V	IF=20mA

Lead soldering Temperature(4mm from body): 260℃ for 5 seconds

ϕ 4.8*4.8mm Round with Flange Colored LED Lamp

Package Dimensions (mm)

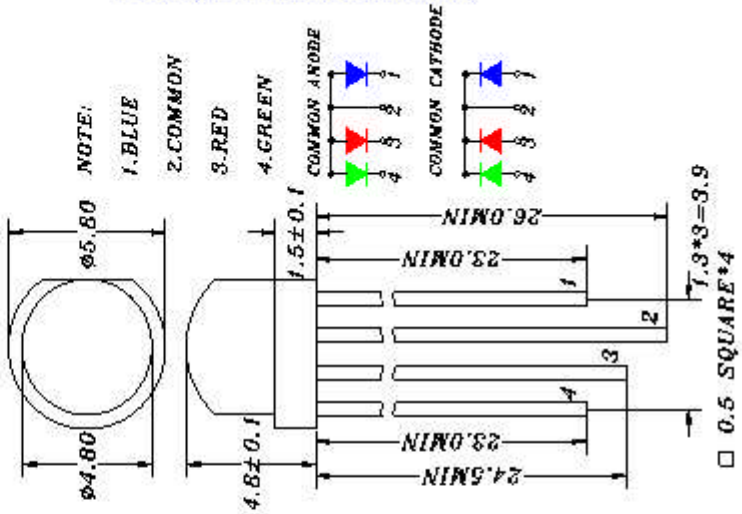

Part Number	Chip Material	Lens Type	Emitting Color	Forward Voltage		Dominant Wavelength (nm)		Luminous Intensity (mcd)		Reverse Current (μA)	Viewing Angel (deg)
				TYP	MAX	MIN	MAX	MIN	MAX	MAX	Δθ
SDL480RGBCN-01	GaALAs	Water Clerar	Ultea Bright Red	1.80	2.40	620	640	200	400	7	±60
	InGaN		U-B Pure Green	3.00	3.60	510	530	1000	1500	7	
	InGaN		Ultea Bright Blue	3.00	3.60	460	475	300	500	7	
SDL480RGBDR-01	GaALAs	White diffused	Ultea Bright Red	1.80	2.40	620	640	100	200	7	±90
	InGaN		U-B Pure Green	3.00	3.60	510	530	500	700	7	
	InGaN		Ultea Bright Blue	3.00	3.60	460	475	100	200	7	
Test condition				IF=20mA		IF=20mA		IF=20mA		VR=5V	IF=20mA

Lead soldering Temperature(4mm from body): 260℃ for 5 seconds

∮ 3.0*5.3mm Round with Flange Colored and flash LED Lamp

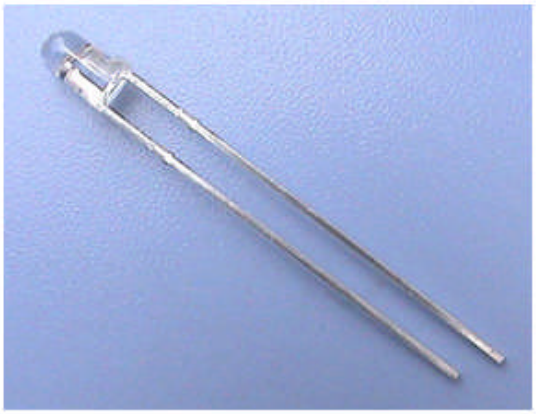

Package Dimensions (mm)

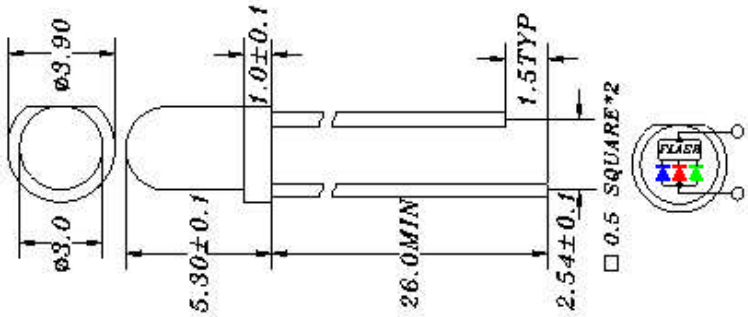

Part Number	Chip Material	Lens Type	Emitting Color	Forward Voltage (V)		Dominant Wavelength (nm)		Luminous Intensity (mcd)		Flicker frequency (HZ)	Reverse Current (μA)	Viewing Angel (deg)
				TYP	MAX	MIN	MAX	MIN	MAX	TYP	MAX	Δθ
SDL300RGBCB-01	GaALAs	Water Clerar	Ultea Bright Red	1.80	2.40	620	640	300	500	1.7	7	±10
	InGaN		U-B Pure Green	3.00	3.60	510	530	2000	3000		7	
	InGaN		Ultea Bright Blue	3.00	3.60	460	475	400	600		7	
SDL300RGBDK-01	GaALAs	White diffused	Ultea Bright Red	1.80	2.40	620	640	100	200	1.7	7	±45
	InGaN		U-B Pure Green	3.00	3.60	510	530	1000	2000		7	
	InGaN		Ultea Bright Blue	3.00	3.60	460	475	200	400		7	

∮ 5.0*8.7mm Round with Flange Colored and flash LED Lamp

Package Dimensions (mm)

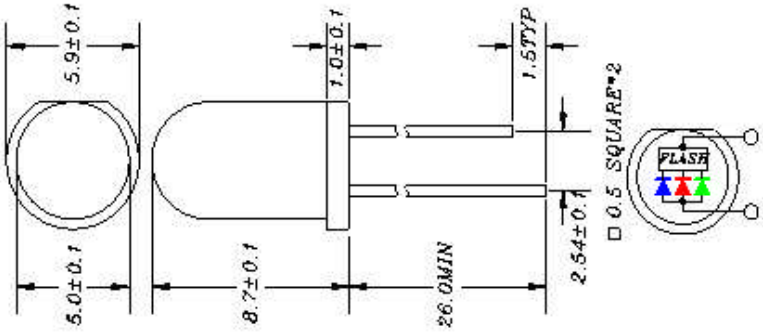

SDL500RGBCC-01	GaALAs	Water Clerar	Ultea Bright Red	1.80	2.40	620	640	600	800	1.7	7	±12.5
	InGaN		U-B Pure Green	3.00	3.60	510	530	3000	4000		7	
	InGaN		Ultea Bright Blue	3.00	3.60	460	475	800	1000		7	
SDL500RGBDK-01	GaALAs	White diffused	Ultea Bright Red	1.80	2.40	620	640	300	500	1.7	7	±45
	InGaN		U-B Pure Green	3.00	3.60	510	530	1500	2500		7	
	InGaN		Ultea Bright Blue	3.00	3.60	460	475	400	600		7	
Test condition)				IF=20mA		IF=20mA		IF=20mA		IF=20mA	VR=5V	IF=20mA

Lead soldering Temperature(4mm from body): 260℃ for 5 seconds

§ 4.8*4.4mm Round with Flange Colored and flash LED Lamp

Package Dimensions (mm)

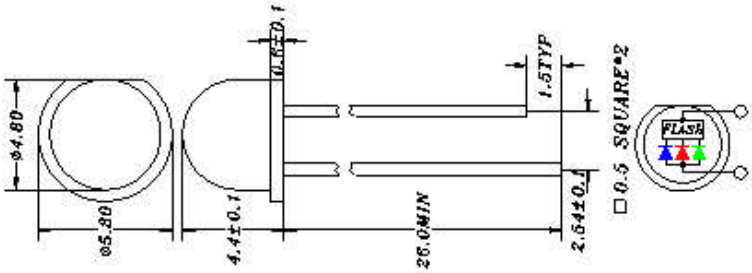

Part Number	Chip Material	Lens Type	Emitting Color	Forward Voltage		Dominant Wavelength (nm)		Luminous Intensity (mcd)		Flicker frequency (HZ)	Reverse Current (μA)	Viewing Angel (deg)
				TYP	MAX	MIN	MAX	MIN	MAX	TYP	MAX	Δθ
SDL480RGBCN-01	GaALAs	Water Clerar	Ultea Bright Red	1.80	2.40	620	640	200	300	1.7	7	±60
	InGaN		U-B Pure Green	3.00	3.60	510	530	800	1000		7	
	InGaN		Ultea Bright Blue	3.00	3.60	460	475	300	500		7	
SDL480RGBDN-01	GaALAs	White diffused	Ultea Bright Red	1.80	2.40	620	640	100	200	1.7	7	±90
	InGaN		U-B Pure Green	3.00	3.60	510	530	500	700		7	
	InGaN		Ultea Bright Blue	3.00	3.60	460	475	150	250		7	

ϕ 5.0*5.3mm Columnar with Flange Colored and flash LED Lamp

Package Dimensions (mm)

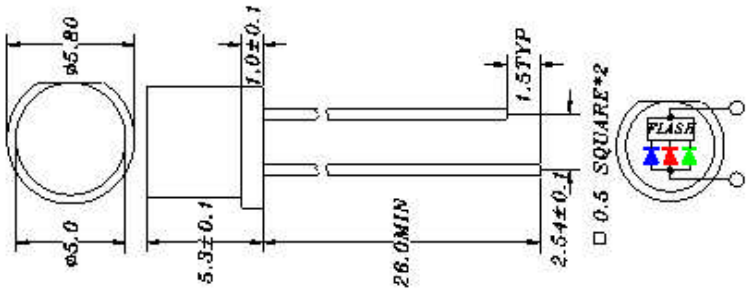

SDL500RGBCN-01	GaALAs	Water Clerar	Ultea Bright Red	1.80	2.40	620	640	200	300	1.7	7	±60
	InGaN		U-B Pure Green	3.00	3.60	510	530	800	1000		7	
	InGaN		Ultea Bright Blue	3.00	3.60	460	475	300	500		7	
SDL500RGBDR-01	GaALAs	White diffused	Ultea Bright Red	1.80	2.40	620	640	100	200	1.7	7	±90
	InGaN		U-B Pure Green	3.00	3.60	510	530	500	700		7	
	InGaN		Ultea Bright Blue	3.00	3.60	460	475	150	250		7	
Test condition				IF=20mA		IF=20mA		IF=20mA		IF=20mA	VR=5V	IF=20mA

Lead soldering Temperature(4mm from body): 260℃ for 5 seconds

∮ 3.0*1.5&7.6*7.6mm Polygonal and colored LED Lamp

Package Dimensions (mm)

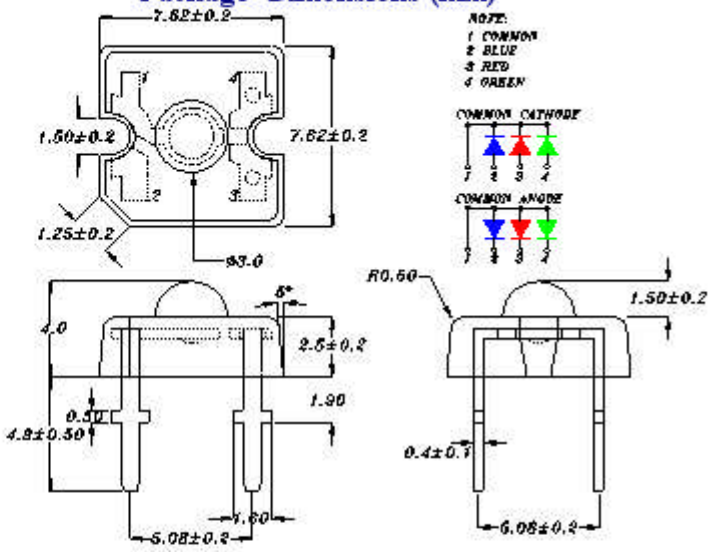

Part Number	Chip Material	Lens Type	Emitting Color	Forward Voltage		Dominant Wavelength (nm)		lumen (lm)		Reverse Current μA)	Viewing Angel (deg)
				TYP	MAX	MIN	MAX	MIN	MAX	MAX	Δθ
SDZ300RGBCN-01	AlGaInP	Water Clerar	S-B Orange Red	1.80	2.40	620	640	0.30	0.50	7	±60
	InGaN		Puer Green	3.00	3.60	510	530	1.00	1.60	7	
	InGaN		High Bright Blue	3.00	3.60	460	475	0.20	0.30	7	
SDZ300RGBDN-01	AlGaInP	White diffused	S-B Orange Red	1.80	2.40	620	640	0.30	0.50	7	±90
	InGaN		Puer Green	3.00	3.60	510	530	1.00	1.60	7	
	InGaN		High Bright Blue	3.00	3.60	460	475	0.20	0.30	7	
Test condition				IF=20mA		IF=20mA		IF=20mA		VR=5V	IF=20mA

Lead soldering Temperature(4mm from body): 260℃ for 5 seconds

∮ 3.0*1.9&7.6*7.6mm Polygonal and colored LED Lamp

Package Dimensions (mm)

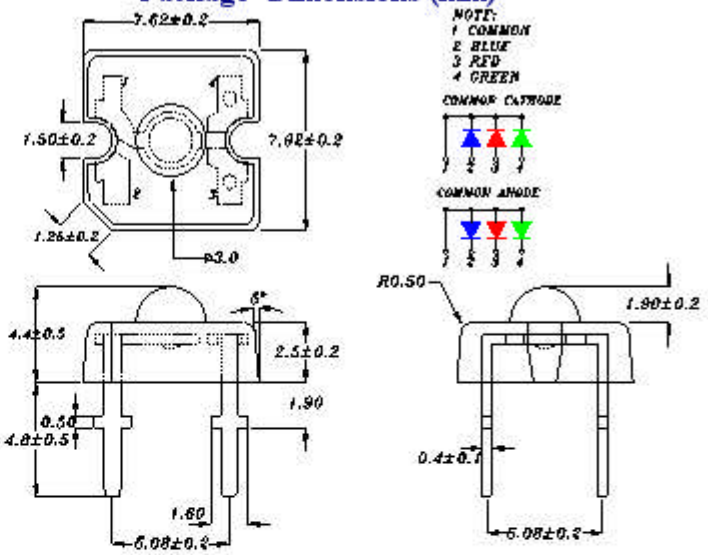

Part Number	Chip Material	Lens Type	Emitting Color	Forward Voltage		Dominant Wavelength (nm)		lumen (lm)		Reverse Current μA)	Viewing Angel (deg)
				TYP	MAX	MIN	MAX	MIN	MAX	MAX	Δθ
SDZ300RGBCK-01	AlGaInP	Water Clerar	S-B Orange Red	1.80	2.40	620	640	0.30	0.50	7	±45
	InGaN		Puer Green	3.00	3.60	510	530	1.00	1.60	7	
	InGaN		High Bright Blue	3.00	3.60	460	475	0.20	0.30	7	
SDZ300RGBDK-01	AlGaInP	White diffused	S-B Orange Red	1.80	2.40	620	640	0.30	0.50	7	±60
	InGaN		Puer Green	3.00	3.60	510	530	1.00	1.60	7	
	InGaN		High Bright Blue	3.00	3.60	460	475	0.20	0.30	7	

Test condition	IF=20mA	IF=20mA	IF=20mA	VR=5V	IF=20mA

Lead soldering Temperature(4mm from body): 260℃ for 5 seconds

$ 5.0*2.5&7.6*7.6mm Polygonal and colored LED Lamp

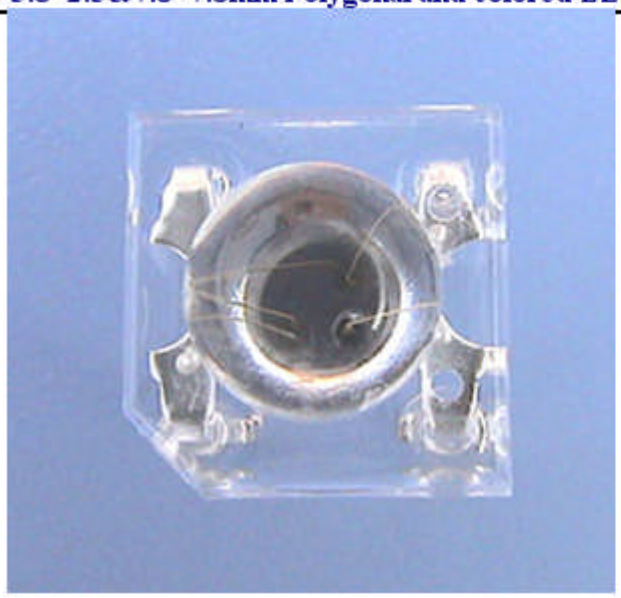

Package Dimensions (mm)

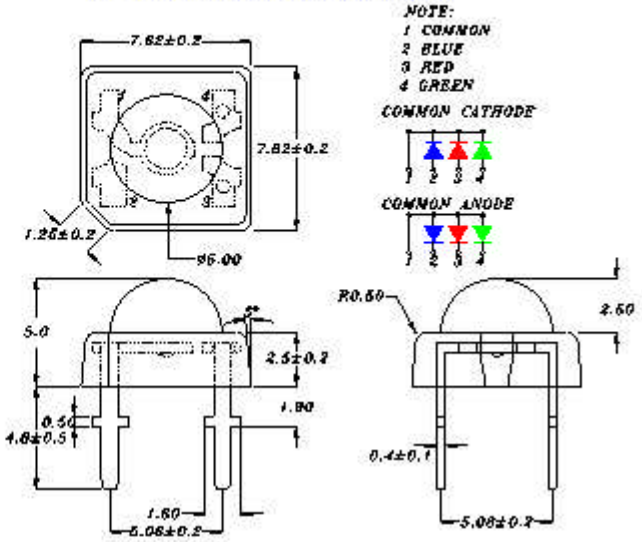

Part Number	Chip Material	Lens Type	Emitting Color	Forward Voltage		Dominant Wavelength (nm)		lumen (lm)		Reverse Current (μA)	Viewing Angel (deg)
				TYP	MAX	MIN	MAX	MIN	MAX	MAX	Δθ
SDZ500RGBCN-01	AlGaInP	Water Clerar	S-B Orange Red	1.80	2.40	620	640	0.30	0.50	7	±60
	InGaN		Puer Green	3.00	3.60	510	530	1.00	1.60	7	
	InGaN		High Bright Blue	3.00	3.60	460	475	0.20	0.30	7	
SDZ500RGBDN-01	AlGaInP	White diffused	S-B Orange Red	1.80	2.40	620	640	0.30	0.50	7	±90
	InGaN		Puer Green	3.00	3.60	510	530	1.00	1.60	7	
	InGaN		High Bright Blue	3.00	3.60	460	475	0.20	0.30	7	

Test condition	IF=20mA	IF=20mA	IF=20mA	VR=5V	IF=20mA
Lead soldering Temperature(4mm from body): 260℃ for 5 seconds					

7.6*7.6mm Polygonal and colored LED Lamp

Package Dimensions (mm)

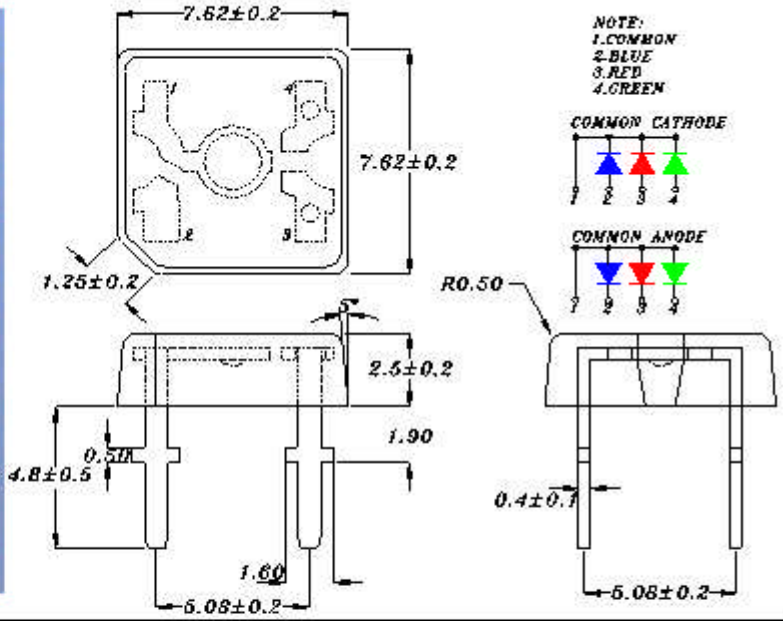

Part Number	Chip Material	Lens Type	Emitting Color	Forward Voltage		Dominant Wavelength		lumen		Reverse Current (μA)	Viewing Angel (deg)
				TYP	MAX	MIN	MAX	MIN	MAX	MAX	Δθ
SDZ250RGBCR-01	AlGaInP	Water Clerar	S-B Orange Red	1.80	2.40	620	640	0.30	0.50	7	±90
	InGaN		Puer Green	3.00	3.60	510	530	1.00	1.60	7	
	InGaN		High Bright Blue	3.00	3.60	460	475	0.20	0.30	7	
SDZ250RGBDR-01	AlGaInP	White diffused	S-B Orange Red	1.80	2.40	620	640	0.30	0.50	7	±90
	InGaN		Puer Green	3.00	3.60	510	530	1.00	1.60	7	
	InGaN		High Bright Blue	3.00	3.60	460	475	0.20	0.30	7	
Test condition				IF=20mA		IF=20mA		IF=20mA		VR=5V	IF=20mA

Lead soldering Temperature(4mm from body): 260℃ for 5 seconds